Interfaccia packet per YAESU FT7900

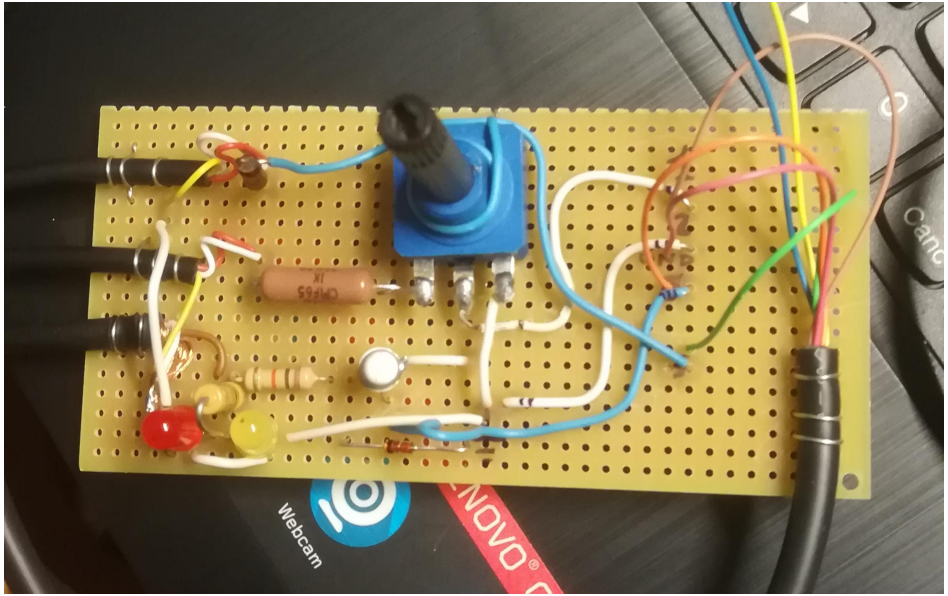

Dopo le varie esperienze con QO100 in ssb e cw, e con ARISS in fm, desideravo provare i collegamenti in packet via ISS. Consultando il web mi sono imbattuto nel sito di I6ibe dal quale ho tratto l'idea. Il tutto perfettamente funzionante con il mio FT-7900.

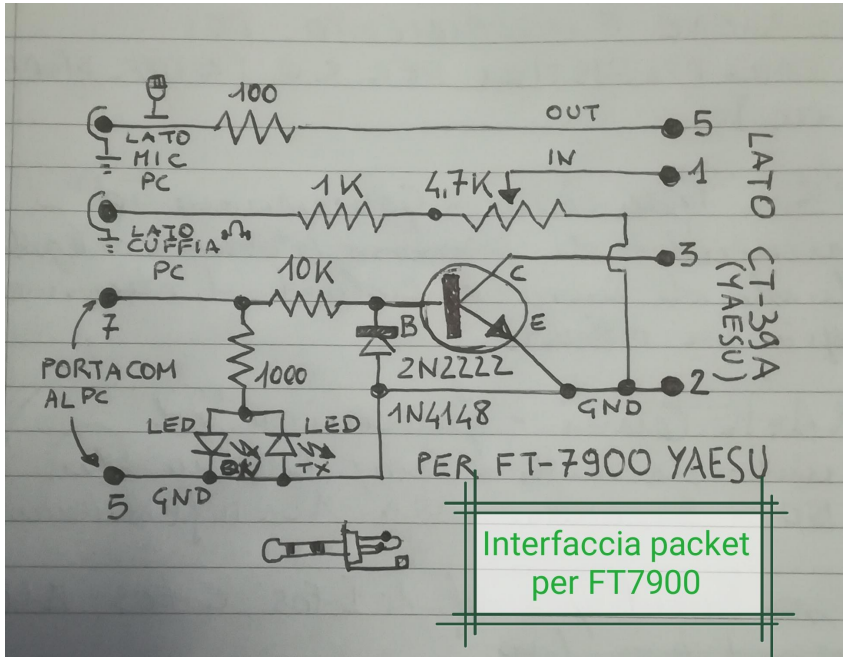

CT-39A Packet Interface Cable

The CT-39A is a convenient interface cable for connection of a Terminal Node Controlled (TNC) to any Yaesu transceiver equipped with a 6-pin mini-DIN data jack for packet.

Complete operating and jack pin-out information may be found in the Instruction Manual for your particular transceiver. Use the color code information below for connection to your TNC.

Wire Color	DATA Jack Pin #	Function
Brown	1	Data Input (TX Audio)
Red	2	Data Ground
Orange	3	PTT (Push to Talk)
Yellow	4	RX Data (9600 bps)/FSK
Green	5	RX Data (1200 bps)
Blue	6	Squelch Status

YAESU MUSEN CO., LTD.

Disposizione pin cavetto Yaesu CT-39A

2E1EBX
les collinson
Victoria avenue
Hunstanton, PE36 6BX
England
Loc:jo02fw ITU:27 CQ:14
ICOM IC-910
To: IK7FMQ Confirming 2-way ISS PSK QSO
Date: April 22, 2021 Time: 08:35 UTC
SatMode: UV UR Sigs: 5X9
Many thanks for the nice contact via ISS/APRS. 73 de Les.

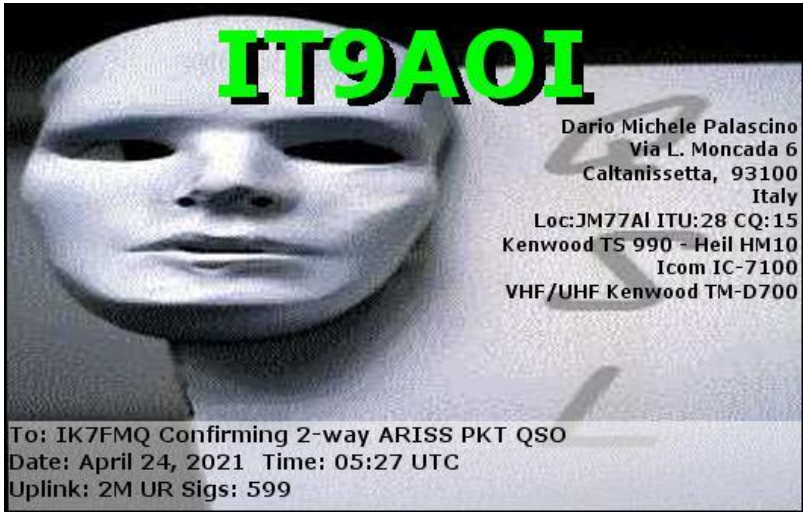
IT9AOI
Dario Michele Palascino
Via L. Moncada 6
Caltanissetta, 93100
Italy
Loc:JM77Al ITU:28 CQ:15
Kenwood TS 990 - Heil HM10
Icom IC-7100
VHF/UHF Kenwood TM-D700
To: IK7FMQ Confirming 2-way ARISS PKT QSO
Date: April 24, 2021 Time: 05:27 UTC
Uplink: 2M UR Sigs: 599

SAØBSV
AMATEUR
RADIO
STATION
Willie Blom
Mosebacke torg 6oa
Stockholm, 11620
Sweden
Loc:JO89XB ITU:18 CQ:14
To: IK7FMQ This confirms our 2-way PKT QSO
Date: April 23, 2021 Time: 06:17 UTC
Band: 2m UR Sigs: 59
Tnx for QSO via ISS Ciao

OH5KUY
Ari Riikonen
Kaarikatu 25
Lappeenranta, FI-53420
FINLAND
Loc:KP41DB ITU:18 CQ:15
FT-1000MP +KT-34XA, R-8 ver, 80 m dipole
FT-818 &TS-480SAT + R8, G5RV
QTH 2: Enonkoski KP42JE
EPC#2514 OMC#103 30MDG#0671 FH#1700
To: IK7FMQ Confirming 2-way ISS PAC QSO
Date: April 22, 2021 Time: 07:03 UTC
SatMode: A UR Sigs: 599
tnx QSO es GDX vy 73 Ari